RGP48R

RGP12R RGP17R RGP21R RGP26R RGP40R RGP48R RGP55R

TAKE CONTROL

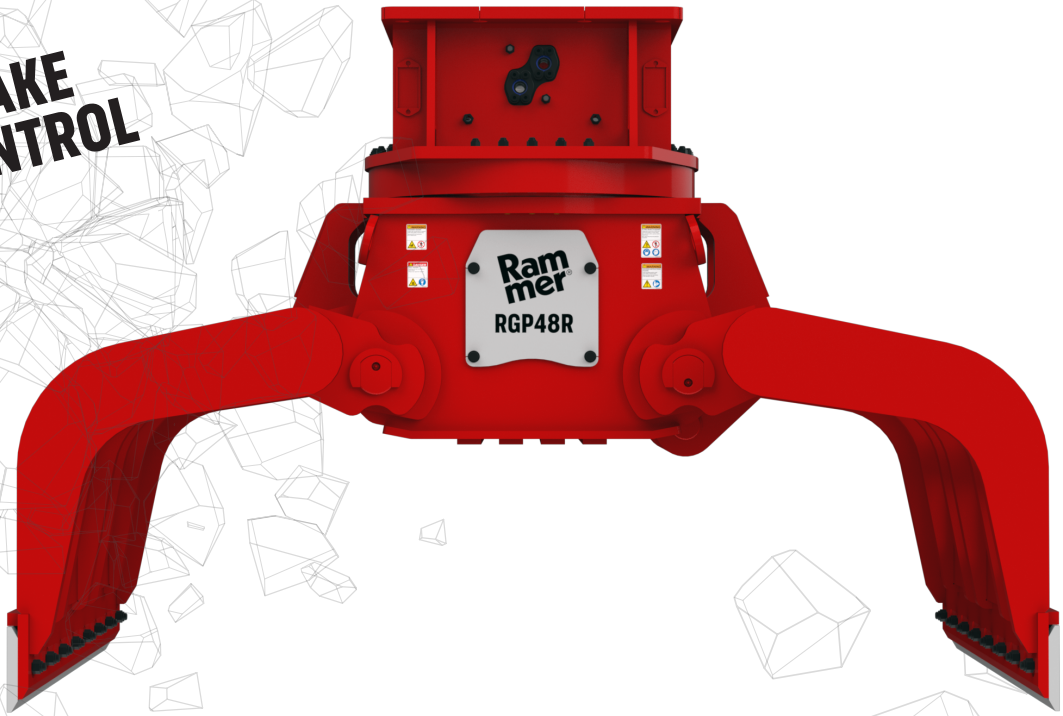

GROUND-LEVEL SECONDARY PROCESSING AND MATERIAL SEPARATION

VERSATILE MATERIAL HANDLING
Handle, sort and separate demolition materials for efficient processing and recycling.

PRECISE POSITIONING
Hydraulic rotation helps position the grapple for controlled material handling.

PROTECTED HYDRAULICS
A pressure relief valve helps protect the hydraulic system from excessive pressure.

RGP48R

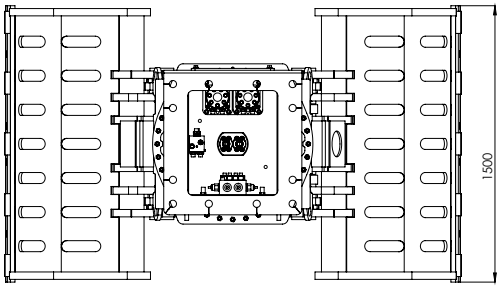

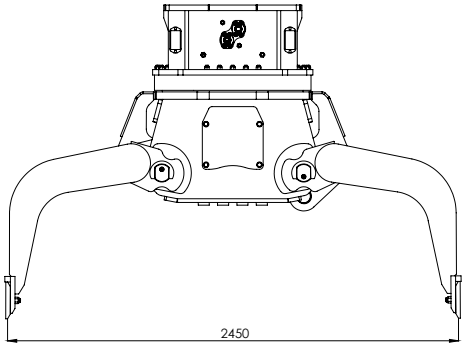

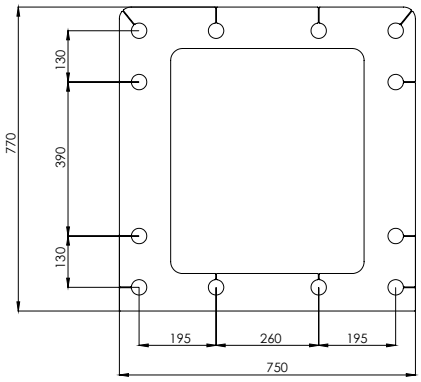

SPECIFICATIONS | RGP48R

OPENING (A)	2450 mm / 96.5 in
HEIGHT (B)	1650 mm / 65 in
WIDTH (C)	1000 mm / 39.4 in
EXCAVATOR WEIGHT	35–60 ton | 77100–132300 lbs
WEIGHT	2680 kg / 5900 lbs
OIL PRESSURE	300 bar / 4351 psi
OIL CAPACITY	120–140 l/min | 31–37 gal/min
ROTATION PRESSURE	120 bar / 1740 psi
ROTATION CAPACITY	40 l/min / 10.5 gal/min
OPERATING TOTAL WEIGHT	2950 kg / 6500 lbs

FIND OUT MORE

Explore RGP48R
Explore specifications, applications and product features.

VIEW PRODUCT DETAILS

Specifications are subject to change without notice